metabo®

TP 8000 S

0250800000 10

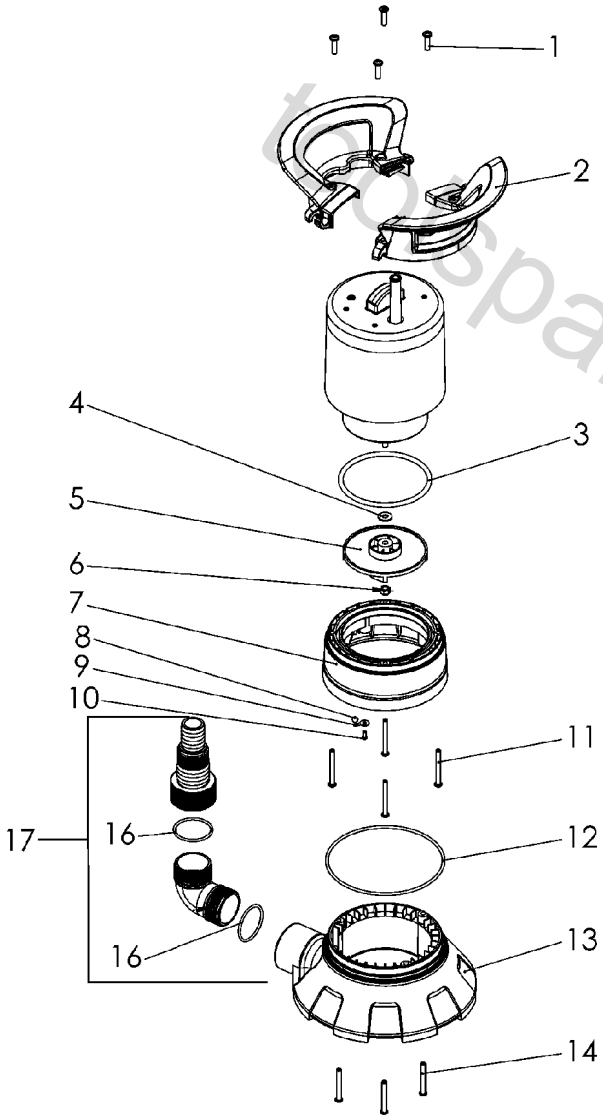

1	1349733532	4
2	1349733273	2
3	7632733334	1
4	1349733605	1
5	1349733141	1
6	1349733591	1
7	1349733281	1
8	1349733265	1
9	1349733257	1
10	1349733559	1
11	1349733583	4
12	7632733342	1
13	1349733095	1
14	1349733559	3
16	7632733326	2
17	0903064846	1

toolspareparts.com.au

TP 8000 S

0250800000 10

Position	Amount	Type number	Description	PG
1	4	1349733532	Screw PT-KB 5x20 VA TP/TPF/TPS/PS	19
2	2	1349733273	Handle TP/TPF/TPS/PS	25
3	1	7632733334	O-Ring 90x4,5 TP/TPF/TPS/PS	19
4	1	1349733605	Washer,6,3x15,5x1,5 A2-70	18
5	1	1349733141	Impeller TP/TPF/PS	25
6	1	1349733591	Hexagonal nut M6 A2-70	16
7	1	1349733281	Intermediate Ring TP 6600S TP 8000S PS 7	27
8	1	1349733265	Ball TP/TPF/TPS/PS	16
9	1	1349733257	Air went sheet TP/TPF/TPS/PS	16
10	1	1349733559	Screw PT-KB 3x8 VA TP/TPF/TPS/PS	10
11	4	1349733583	Screw PT-KB 5x45 VA TP/TPF/TPS/PS	16
12	1	7632733342	O-Ring 135x3 TP/PS	16
13	1	1349733095	Pump Base TP6600 S TP 8000 S TP 13000 S	31
14	3	1349733559	Screw PT-KB 3x8 VA TP/TPF/TPS/PS	10
16	2	7632733326	O-Ring 38x2,5 TP/TPF/PS	17
17	1	0903064846	Angle Connection with Multi-Adaptor	

tradeparts.com.au